IPS320BD

MOTEURS Baudouin

DIESEL GENERATOR SET

50 Hz

SERVICE		STAND BY	PRIME
Power	*kVA*	320	288
Power	*kW*	256	231
Speed	*r.p.m*	1500	
Standart Voltage	*V*	400/231	
Power Factor	*Cos Phi*	0,8	

Prime Power (PRP)

According to ISO 8528-1:2005, Prime power is the maximum power which a generating set is capable of delivering continuously whilst supplying a variable electrical load when operated for an unlimited number of hours per year under the agreed operating conditions with the maintenance intervals and procedures being carried out as prescribed by the manufacturer. The permissible average power output (Ppp) over 24 h of operation shall not exceed 70 % of the PRP.

Emergency Standby Power (ESP):

According to ISO 8528-1:2005, Emergency standby power is the maximum power available during a variable electrical power sequence, under the stated operating conditions, for which a generating set is capable of delivering in the event of a utility power outage or under test conditions for up to 200 h of operation per year with the maintenance intervals and procedures being carried out as prescribed by the manufacturers. The permissible average power output over 24 h of operation shall not exceed 70 % of the ESP.

+90 532 65 35 pbx
info@ideaglb.com

IDEA GLOBAL TRADING
Kucukbakkalköy Mah. Kırmızı Sunbul Sk. Gonul Sitesi
A Blok D:7 34750 AtaSehir / Istanbul
+90 532 375 65 35 | www.ideaglb.com

IPS320BD

ENGINE

		SPECIFICATIONS
Brand		BAUDOUN
Model		6M16G300/5
Power StanBDy	*kW*	280
Power Prime	*kW*	255
Cycle		4
Displacement	*lt*	9,726
Number Of Cylinders		6, in line
Bore and Stroke	*mm*	126x130
Compression Ratio		18:01
Governor		Electronic
Induction		Turbocharged-Aftercooler
Cumbustion System		Dırect
Cooling System		Water
Fuel Consumption %100 Load	*lt/h*	58,8
Fuel Consumption %75 Load	*lt/h*	45,2
Fuel Consumption %50 Load	*lt/h*	32,6
Total Lubrication System Capacitty	*lt*	30
Total Coolant Capacity	*lt*	35

ALTERNATOR

	SPECIFICATIONS
Number Of Phases	3
Power Factor	0,8
No of Bearings	Single
No of Poles	4
No of Leads	6-12
Insulation Class	H
Degree of Protection	IP23
Excitation System	AVR

+90 532 65 35 pbx
www.ideaglb.com

IDEA GLOBAL TRADING
Kucukbakkalköy Mah. Kırmızı Sunbul Sk. Gonul Sitesi
A Blok D:7 34750 AtaSehir / Istanbul
+90 532 375 65 35 | www.ideaglb.com

IPS320BD

IDEA GLOBAL POWER SYSTEMS

OPTIONAL GENSET CONTROLLERS

Next generation single gen-set controllers for Stand-by and Prime power applications combining multi-functionality and wide communication with EFI engines.

Datakom SMART 200

Datakom D500

Datakom D500-GSM

EMKO Trans-AUTO

DEEPSEA 7320

ComAp AMF25

	Datakom SMART 200	Datakom D500	Datakom D500-GSM	Deepsea 6120	Deepsea 7320	ComAp AMF25	EMKO Trans-AUTO
Automatic Mains Monitoring	✓	✓	✓	✓	✓	✓	✓
Manuel Start	✓	✓	✓	✓	✓	✓	✓
Remote Start	OPTIONAL	OPTIONAL	✓	X	OPTIONAL	OPTIONAL	OPTIONAL
Remote Monitoring With Sim Card	X	OPTIONAL	OPTIONAL	OPTIONAL	OPTIONAL	OPTIONAL	OPTIONAL
1 Aditional Option (Horn, Oil-Fuel Heater Etc.)	✓	✓	✓	✓	✓	✓	✓
Light Warning And Mimic Diagram	✓	✓	✓	✓	✓	✓	✓
Battery Charger	✓	✓	✓	✓	✓	✓	✓
Rs-485 Communication	OPTIONAL	✓	✓	X	✓	OPTIONAL	✓
Ethernet (Tcp-Ip) Communication	X	✓	✓	X	OPTIONAL	OPTIONAL	OPTIONAL

GENSET CONTROLLERS FOR SYNCHRONIZATION SYSTEMS

Next generation synchronizing genset controller capable of every communication and functionality.

Datakom D500 MK2

Datakom D700

DEEPSEA 8610

DEEPSEA 8620

DEEPSEA 8660

ComAp InteliCompact NT SPtM

ComAp InteliGen BaseBox

ComAp InteliGen 200

+90 532 65 35 pbx

www.ideaglb.com

IDEA GLOBAL TRADING

Kucukbakkalköy Mah. Kırmızı Sunbul Sk. Gonul Sitesi

A Blok D:7 34750 AtaSehir / Istanbul

+90 532 375 65 35 | www.ideaglb.com

IPS320BD

DIMENSIONS

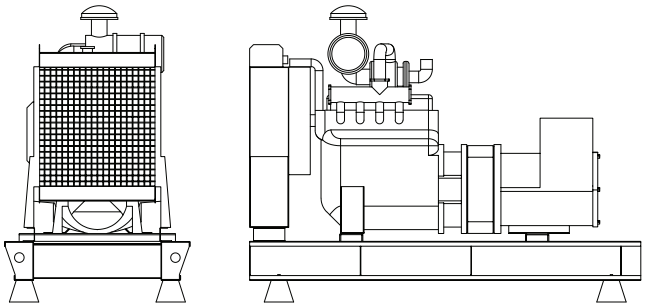

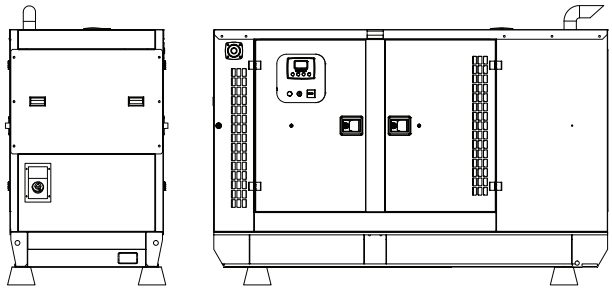

OPEN TYPE

WxLxH	mm	1200 2850 1850
Weight	kg	2385
Fuel Tank Capacity	lt	415

CANOPIED

WxLxH	mm	1200 x 3600 2480
Weight	kg	2766,6
Fuel Tank Capacity	lt	415

SOUND PROF CANOPIED

- Special design for minimizing acoustic level
- Galvanized steel construction further protected by polyester powder coat paint
- Black finish stainless steel locks and hinges
- Control panel viewing window in a lockable access door
- Emergency stop push button (red) mounted on enclosure exterior
- Lifting, drag and jacking points on base frame
- Radiator fill via removable, flush mounted rain cap fitted with compression seal

OPTIONAL EQUIPMENTS

Some of our Optional Equipments which can be provided with Generator Sets But not limited to;

- Medium voltage alternator
- Remote radiator applications
- External fuel tanks. Automatic and Manuel fuel filling system from external fuel tanks
- Fuel tank heater, oil pan heater,Anti-condensation heater
- Alternator with PMG (Permanent Magnet Generator)
- Synchronization systems
- Double Walled Fuel Tanks
- Container type canopy
- Lube oil and fuel drain pumps
- Trailer
- Remote monitoring options on the control panel
- Electronic fuel level indicator

+90 532 65 35 pbx
www.ideaglb.com

IDEA GLOBAL TRADING
Kucukbakkalköy Mah. Kırmızı Sunbul Sk. Gonul Sitesi
A Blok D:7 34750 AtaSehir / Istanbul
+90 532 375 65 35 | www.ideaglb.com